03D – TECHNICAL CHARACTERISTICS 2

1. DATASHEET 2

2. PERMISSIBLE WIND SPEED ACCORDING TO THE SURFACE OF A LIFTED LOAD 6

2. 1. EVALUATION OF A LOAD SURFACE 6

2. 2. TABLES OF PERMISSIBLE MAXIMUM WIND SPEEDS 6

© .POTAIN. 2002.

Any reproduction
for commercial purpose is forbidden.

03D – TECHNICAL CHARACTERISTICS

1. DATASHEET

POTAIN

MC 475 M25

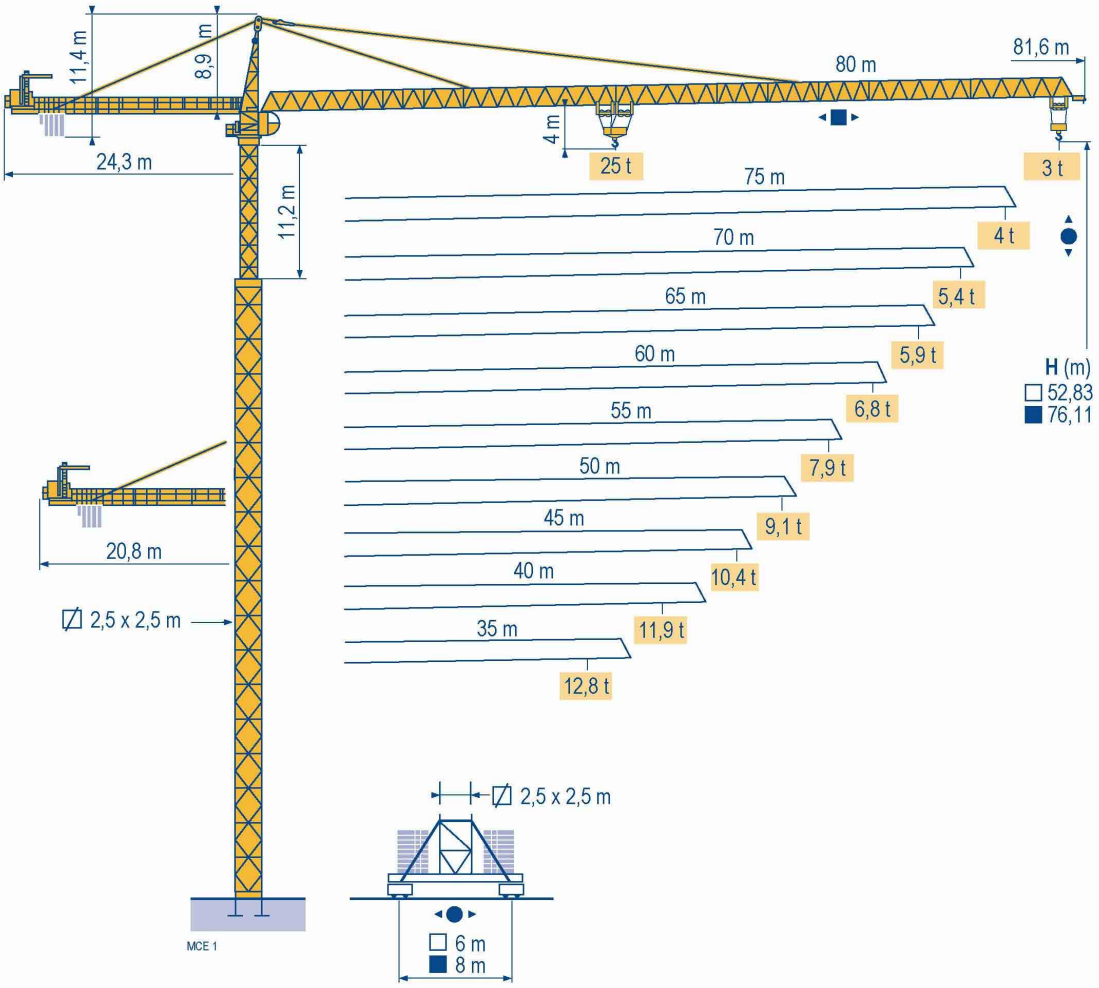

Manitowoc Crane Group

TÜV ISO 9001 FEM 1.001-A3

© .POTAIN. 2002.
Any reproduction for commercial purpose is forbidden

Masts / Reactions

MOE1

⌀ 2,5 m

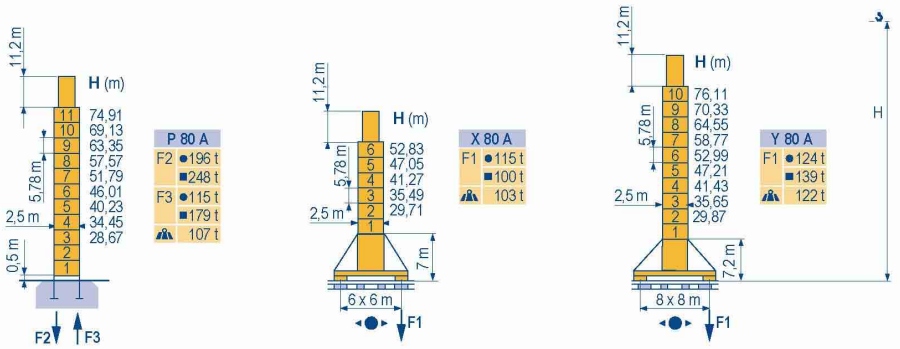

Anchorages

MOE1

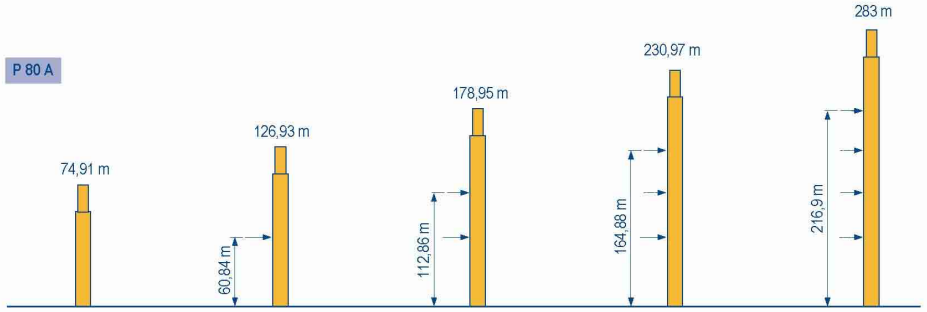

MC 475 M25

GB

- ● Reactions in service
- ■ Reactions out of service
- Without load, ballast (or transport axles), with maximum jib and maximum height.

© .POTAIN. 2002.
Any reproduction for commercial purpose is forbidden

Load diagrams

MCE 1

80 m	3,1 ►	14,3	15	17	20	22	25	25,2	27,2	30	32	35	40	45	50	55	60	65	70	75	80	m
		25	23,6	20,3	16,7	14,8	12,6	12,5 ←	→ 12,5	11,1	10,3	9,3	7,9	6,8	5,9	5,2	4,6	4,2	3,7	3,4	3	t
75 m	3,1 ►	15,6	17	20	22	25	27	27,7	29,9	32	35	40	45	50	55	60	65	70	75	m		
		25	22,6	18,6	16,6	14,2	12,9	12,5 ←	→ 12,5	11,6	10,4	8,9	7,7	6,8	6	5,3	4,8	4,3	4	t		
70 m	3,1 ►	18	20	22	25	27	30	32,3	34,8	35	40	45	50	55	60	65	70	m				
		25	22,2	19,8	17,1	15,6	13,7	12,5 ←	→ 12,5	12,4	10,7	9,3	8,2	7,3	6,6	5,9	5,4	t				
65 m	3,1 ►	18,1	20	22	25	27	30	32,4	34,9	35	40	45	50	55	60	65	m					
		25	22,2	19,9	17,1	15,6	13,7	12,5 ←	→ 12,5	12,5	10,7	9,3	8,2	7,3	6,6	5,9	t					
60 m	3,1 ►	18,7	20	22	25	27	30	32	33,4	36,1	40	45	50	55	60	m						
		25	23,1	20,7	17,8	16,2	14,3	13,2	12,5 ←	→ 12,5	11,1	9,7	8,5	7,6	6,8	t						
55 m	3,1 ►	19,3	20	22	25	27	30	32	34,6	37,4	40	45	50	55	m							
		25	24	21,5	18,5	16,9	14,9	13,8	12,5 ←	→ 12,5	11,6	10,1	8,9	7,9	t							
50 m	3,1 ►	19,6	20	22	25	27	30	32	35,1	37,9	40	45	50	m								
		25	24,4	21,8	18,8	17,2	15,1	14	12,5 ←	→ 12,5	11,7	10,2	9,1	t								
45 m	3,1 ►	19,7	20	22	25	27	30	32	35,4	38,2	40	45	m									
		25	24,6	22,1	19	17,3	15,3	14,1	12,5 ←	→ 12,5	11,9	10,4	t									
40 m	3,1 ►	19,9	20	22	25	27	30	32	35,6	38,4	40	m										
		25	24,8	22,2	19,1	17,5	15,4	14,3	12,5 ←	→ 12,5	11,9	t										
35 m	3,1 ►	20	22	25	27	30	32	35	m													
		25	22,4	19,3	17,6	15,5	14,3	12,8	t													

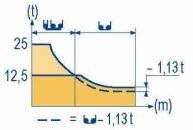

Counter-jib ballast

MCE 1

	4 000 kg - 6 000 kg	
	150 LCC	
		(kg)
80 m	24,3 m	30 000
75 m	24,3 m	28 000
70 m	24,3 m	28 000
65 m	24,3 m	26 000
60 m	24,3 m	22 000
55 m	24,3 m	20 000
50 m	20,8 m	26 000
45 m	20,8 m	22 000
40 m	20,8 m	20 000
35 m	20,8 m	16 000

Base ballast

MCE 1

2,50 m	X 80 A	H (m)	52,83	47,05	41,27	35,49	29,71
		(t)	96	96	96	96	96

2,50 m	Y 80 A	H (m)	76,11	70,33	64,55	58,77	52,99	47,21	41,43	35,65	29,87
		(t)	96	84	60	60	60	60	60	60	60

MC 475 M25

POTAIN

GB

A	Distance between collars
H1	Crane height
P	Crane weight (in service)
R	Horizontal reaction

© .POTAIN. 2002.
Any reproduction for commercial purpose is forbidden

Mechanisms

MCE 2

MC 475 M25 - 50 Hz												ch - PS hp	kW	
150 LCC 63	m/min	46 →	56 →	70 →	92 →	110	23 →	28 →	35 →	46 →	55	150	110	461 m
	t	12,5	9	6	3	1,56	25	18	12	6	3,12			
RVF 183 Optima +	tr/min U/min - rpm	0 → 0,8										3 x 12	3 x 9	
10 DVF 10	m/min	0 → 64 (25 t) - 0 → 100 (12,5 t) - 0 → 110 (6,25 t)										10	7,4	
X 80 A Y 80 A RT 664 A2B - 2V	m/min	16 - 32										6 x 7	6 x 5,2	

CEI 38 IEC 38	kVA
400 V (+6% -10%)	150 LCC : 185 kVA

MC 475 M25 - 60 Hz												ch - PS hp	kW	
150 LCC 63	m/min	46 →	56 →	70 →	92 →	110	23 →	28 →	35 →	46 →	55	150	110	461 m
	t	12,5	9	6	3	1,56	25	18	12	6	3,12			
RVF 183 Optima +	tr/min U/min - rpm	0 → 0,8										3 x 12	3 x 9	
10 DVF 10	m/min	0 → 64 (25 t) - 0 → 100 (12,5 t) - 0 → 110 (6,25 t)										10	7,4	
X 80 A Y 80 A RT 664 A2B - 2V	m/min	19 - 38										6 x 8,4	6 x 6,2	

CEI 38 IEC 38	kVA
480 V (+6% -10%)	150 LCC : 215 kVA

GB

- Hoisting
- Trolleying
- Slewing
- Travelling

This commercial document is not legally binding.
For any technical information, please refer to the corresponding instructions.

Manitowoc Crane CARE

Manitowoc Crane Group

Manitowoc Crane Group Asia Pte Ltd
Manitowoc Crane Group
4 Kwong Min Road
Singapore 628707
Tel: +65 6264 1188
Fax: +65 6862 4040
www.manitowoccranegroup.com

Americas
Tel : +1 888 479 7278
Tel : +1 717 593 2000

Europe – Middle East – Africa
Tel : +33 (0) 4 72 81 50 00
Tel : +44 (0) 191 522 2000

Asia – Pacific
Tel : +65 6264 1188
Fax : +65 6862 4142

www.manitowoccranegroup.com

MC 475 M25
Réf. 2004 45 MCE 2

Copyright.Reproduction interdite © POTAIN 2004

Réalisation Sedoc

Subject to modification

© .POTAIN. 2002.
Any reproduction for commercial purpose is forbidden

2. PERMISSIBLE WIND SPEED ACCORDING TO THE SURFACE OF A LIFTED LOAD

- The permissible operating wind speed is 72 km/h for a load of which the surface exposed to the wind does not exceed 1 m2 per ton of useful load (standard data for the crane calculation). For reasons of stability, crane resistance and operating safety, it is necessary – in compliance with the standards in force – to reduce the permissible operating wind speed for handling loads with a surface/load ratio exceeding 1 m^2/t.

2. 1. EVALUATION OF A LOAD SURFACE

- In easy cases, load with full or with latticed surface, the calculation of the surface is **S (m^2) = L x l** – product of the two largest surfaces exposed to the wind (Ex.: sheetings, see below). In more difficult cases, PLEASE CONSULT US.

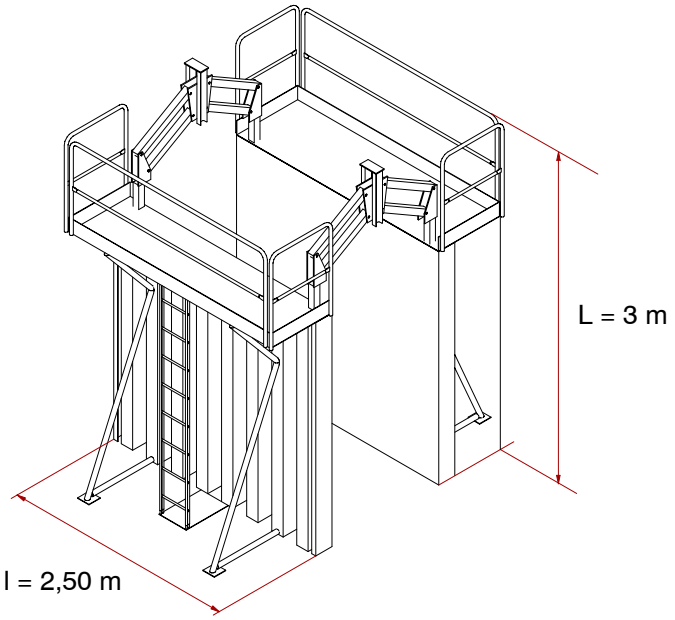

Example: **S = 3 m x 2,50 m = 7,5 m^2**

See the tables on the following pages for determining the permissible wind speed in service.

2. 2. TABLES OF PERMISSIBLE MAXIMUM WIND SPEEDS

- The tables of the following pages indicate the wind speed for:
  - a crane equipped with one trolley (SM/DM) which is used with 2–fall reeving (SM) or 4–fall reeving (DM),
  - a crane with only a 2–fall equipment (SM), but limited to its load capacity at 2–fall reeving.

It is not the actual value of the load which is important, but the crane capacity for a given radius which determines the maximum wind speed.

© .POTAIN. 2002.
Any reproduction
for commercial purpose is forbidden.

2. 2. 1. Description and use of tables

- **Characteristics – example** :
  - Crane type: MD 120 A
  - Jib length: 50 m
  - Radius: 30 m
  - Weight of the load: 3,2 t
- **Calculation of the surface:**
  - Load surface: S = 3 m x 2,50 m = 7,5 m^2 ≃ 8 m^2
- **The permissible maximum wind speed in service is 48 km/h (see the grey tinted parts of the corresponding table)**. It corresponds to the crossing of the columns: radius 30 m, surface 8 m^2.

Radii	19	22	25	27	30	32	34	35	37	40	42	45	47	50
Load curve (in t)	6	5,13	4,41	4,03	3,64	3,27	3	3	2,79	2,53	2,38	2,18	2,06	1,9
S (in m^2)	Permissible maximum wind speed in service (in km/h)													
1	72	72	72	72	72	72	72	72	72	72	72	72	72	72
2	72	72	72	72	72	72	72	72	72	72	72	72	72	70
3	72	72	72	72	72	72	72	72	69	66	64	61	60	57
4	72	72	72	72	68	65	62	62	60	57	56	53	52	50
5	72	72	68	65	61	58	56	56	54	51	50	48	46	44
6	72	67	62	59	55	53	51	51	49	47	45	43	42	41
7	67	62	57	55	51	49	47	47	45	43	42	40	39	38
8	62	58	53	51	48	46	44	44	43	40	39	38	37	35
S = Surface of the lifted load in m^2														

© .POTAIN. 2002.
Any reproduction
for commercial purpose is forbidden.

2. 2. 2. Permissible maximum wind speed for a load surface bigger than 1m²/t (1C in 2C version)

2. 2. 2. 1. 80 m jib (1C)

Radii	14,3	15	17	20	22	25	25,2	27,2	30	32	35	40	45	50	55	60	65	70	75	80
Load curve (in t)	25	23,6	20,3	16,7	14,8	12,6	12,5	12,5	11,1	10,3	9,3	7,9	6,8	5,9	5,2	4,6	4,2	3,7	3,4	3
S (in m²)	Permissible maximum wind speed in service (in km/h)																			
1	72	72	72	72	72	72	72	72	72	72	72	72	72	72	72	72	72	72	72	72
2	72	72	72	72	72	72	72	72	72	72	72	72	72	72	72	72	72	72	72	72
3	72	72	72	72	72	72	72	72	72	72	72	72	72	72	72	72	72	72	72	72
4	72	72	72	72	72	72	72	72	72	72	72	72	72	72	72	72	72	69	66	62
5	72	72	72	72	72	72	72	72	72	72	72	72	72	72	72	69	66	62	59	56
6	72	72	72	72	72	72	72	72	72	72	72	72	72	71	67	63	60	57	54	51
7	72	72	72	72	72	72	72	72	72	72	72	72	71	66	62	58	56	52	50	47
8	72	72	72	72	72	72	72	72	72	72	72	72	66	62	58	55	52	49	47	44
9	72	72	72	72	72	72	72	72	72	72	72	67	63	58	55	51	49	46	44	42
10	72	72	72	72	72	72	72	72	72	72	69	64	59	55	52	49	47	44	42	39
11	72	72	72	72	72	72	72	72	72	70	66	61	57	53	50	47	44	42	40	38
12	72	72	72	72	72	72	72	72	69	67	63	58	54	50	47	45	43	40	38	36
13	72	72	72	72	72	71	71	71	67	64	61	56	52	49	46	43	41	38	37	35
14	72	72	72	72	72	68	68	68	64	62	59	54	50	47	44	41	39	37	35	33
15	72	72	72	72	72	66	66	66	62	60	57	52	48	45	42	40	38	36	34	32
16	72	72	72	72	69	64	64	64	60	58	55	51	47	44	41	39	37	35	33	31
17	72	72	72	71	67	62	62	62	58	56	53	49	46	42	40	37	36	34	32	30
18	72	72	72	69	65	60	60	60	57	54	52	48	44	41	39	36	35	33	31	29
19	72	72	72	68	64	59	58	58	55	53	50	46	43	40	38	35	34	32	30	29
20	72	72	72	66	62	57	57	57	54	52	49	45	42	39	37	35	33	31	30	28

S = Surface of the lifted load in m²

© .POTAIN. 2002.
Any reproduction for commercial pur-

2. 2. 2. 2. 75 m jib (1C)

Radii		15,6	17	20	22	25	27	27,7	29,9	32	35	40	45	50	55	60	65	70	75	
Load curve (in t)		25	22,6	18,6	16,6	14,2	12,9	12,5	12,5	11,6	10,4	8,9	7,7	6,8	6	5,3	4,8	4,3	4	
S (in m²)	Permissible maximum wind speed in service (in km/h)																			
1		72	72	72	72	72	72	72	72	72	72	72	72	72	72	72	72	72	72	
2		72	72	72	72	72	72	72	72	72	72	72	72	72	72	72	72	72	72	
3		72	72	72	72	72	72	72	72	72	72	72	72	72	72	72	72	72	72	
4		72	72	72	72	72	72	72	72	72	72	72	72	72	72	72	72	72	72	
5		72	72	72	72	72	72	72	72	72	72	72	72	72	72	72	71	67	64	
6		72	72	72	72	72	72	72	72	72	72	72	72	72	72	68	64	61	59	
7		72	72	72	72	72	72	72	72	72	72	72	72	71	67	63	60	56	54	
8		72	72	72	72	72	72	72	72	72	72	72	71	66	62	59	56	53	51	
9		72	72	72	72	72	72	72	72	72	72	72	67	63	59	55	53	50	48	
10		72	72	72	72	72	72	72	72	72	72	68	63	59	56	52	50	47	46	
11		72	72	72	72	72	72	72	72	72	70	65	60	57	53	50	48	45	43	
12		72	72	72	72	72	72	72	72	71	67	62	58	54	51	48	46	43	42	
13		72	72	72	72	72	72	71	71	68	64	60	55	52	49	46	44	41	40	
14		72	72	72	72	72	69	68	68	66	62	57	53	50	47	44	42	40	38	
15		72	72	72	72	70	67	66	66	63	60	55	52	48	46	43	41	39	37	
16		72	72	72	72	68	65	64	64	61	58	54	50	47	44	41	39	37	36	
17		72	72	72	71	66	63	62	62	59	56	52	48	46	43	40	38	36	35	
18		72	72	72	69	64	61	60	60	58	55	51	47	44	42	39	37	35	34	
19		72	72	71	67	62	59	58	58	56	53	49	46	43	40	38	36	34	33	
20		72	72	69	66	61	58	57	57	55	52	48	45	42	39	37	35	33	32	

S = Surface of the lifted load in m²

© POTAIN. 2002.
Any reproduction for commercial pur-

2. 2. 2. 3. 70 m jib (1C)

Radii			18	20	22	25	27	30	32,3	34,8	35	40	45	50	55	60	65	70		
Load curve (in t)			25	22,2	19,8	17,1	15,6	13,7	12,5	12,5	12,4	10,7	9,3	8,2	7,3	6,6	5,9	5,4		
S (in m^2)	Permissible maximum wind speed in service (in km/h)																			
1			72	72	72	72	72	72	72	72	72	72	72	72	72	72	72	72		
2			72	72	72	72	72	72	72	72	72	72	72	72	72	72	72	72		
3			72	72	72	72	72	72	72	72	72	72	72	72	72	72	72	72		
4			72	72	72	72	72	72	72	72	72	72	72	72	72	72	72	72		
5			72	72	72	72	72	72	72	72	72	72	72	72	72	72	72	72		
6			72	72	72	72	72	72	72	72	72	72	72	72	72	72	71	68		
7			72	72	72	72	72	72	72	72	72	72	72	72	72	70	66	63		
8			72	72	72	72	72	72	72	72	72	72	72	72	69	65	62	59		
9			72	72	72	72	72	72	72	72	72	72	72	69	65	62	58	56		
10			72	72	72	72	72	72	72	72	72	72	69	65	62	58	55	53		
11			72	72	72	72	72	72	72	72	72	71	66	62	59	56	53	50		
12			72	72	72	72	72	72	72	72	72	68	63	60	56	53	50	48		
13			72	72	72	72	72	72	71	71	70	65	61	57	54	51	49	46		
14			72	72	72	72	72	71	68	68	68	63	59	55	52	49	47	45		
15			72	72	72	72	72	69	66	66	65	61	57	53	50	48	45	43		
16			72	72	72	72	71	67	64	64	63	59	55	52	49	46	44	42		
17			72	72	72	72	69	65	62	62	61	57	53	50	47	45	42	41		
18			72	72	72	70	67	63	60	60	60	56	52	49	46	44	41	39		
19			72	72	72	68	65	61	58	58	58	54	50	47	45	42	40	38		
20			72	72	72	67	64	60	57	57	57	53	49	46	43	41	39	37		
S = Surface of the lifted load in m^2																				

© .POTAIN. 2002.
Any reproduction for commercial pur-

2. 2. 2. 4. 65 m jib (1C)

Radii			18,1	20	22	25	27	30	32,4	34,9	35	40	45	50	55	60	65			
Load curve (in t)			25	22,2	19,9	17,1	15,6	13,7	12,5	12,5	12,5	10,7	9,3	8,2	7,3	6,6	5,9			
S (in m²)	Permissible maximum wind speed in service (in km/h)																			
1			72	72	72	72	72	72	72	72	72	72	72	72	72	72	72			
2			72	72	72	72	72	72	72	72	72	72	72	72	72	72	72			
3			72	72	72	72	72	72	72	72	72	72	72	72	72	72	72			
4			72	72	72	72	72	72	72	72	72	72	72	72	72	72	72			
5			72	72	72	72	72	72	72	72	72	72	72	72	72	72	72			
6			72	72	72	72	72	72	72	72	72	72	72	72	72	72	71			
7			72	72	72	72	72	72	72	72	72	72	72	72	72	70	66			
8			72	72	72	72	72	72	72	72	72	72	72	72	69	65	62			
9			72	72	72	72	72	72	72	72	72	72	72	69	65	62	58			
10			72	72	72	72	72	72	72	72	72	72	69	65	62	58	55			
11			72	72	72	72	72	72	72	72	72	71	66	62	59	56	53			
12			72	72	72	72	72	72	72	72	72	68	63	60	56	53	50			
13			72	72	72	72	72	72	71	71	71	65	61	57	54	51	49			
14			72	72	72	72	72	71	68	68	68	63	59	55	52	49	47			
15			72	72	72	72	72	69	66	66	66	61	57	53	50	48	45			
16			72	72	72	72	71	67	64	64	64	59	55	52	49	46	44			
17			72	72	72	72	69	65	62	62	62	57	53	50	47	45	42			
18			72	72	72	70	67	63	60	60	60	56	52	49	46	44	41			
19			72	72	72	68	65	61	58	58	58	54	50	47	45	42	40			
20			72	72	72	67	64	60	57	57	57	53	49	46	43	41	39			

S = Surface of the lifted load in m²

© POTAIN. 2002.
Any reproduction for commercial pur-

2. 2. 2. 5. 60 m jib (1C)

Radii			18,7	20	22	25	27	30	32	33,4	36,1	40	45	50	55	60				
Load curve (in t)			25	23,1	20,7	17,8	16,2	14,3	13,2	12,5	12,5	11,1	9,7	8,5	7,6	6,8				
S (in m²)	Permissible maximum wind speed in service (in km/h)																			
1			72	72	72	72	72	72	72	72	72	72	72	72	72	72				
2			72	72	72	72	72	72	72	72	72	72	72	72	72	72				
3			72	72	72	72	72	72	72	72	72	72	72	72	72	72				
4			72	72	72	72	72	72	72	72	72	72	72	72	72	72				
5			72	72	72	72	72	72	72	72	72	72	72	72	72	72				
6			72	72	72	72	72	72	72	72	72	72	72	72	72	72				
7			72	72	72	72	72	72	72	72	72	72	72	72	72	71				
8			72	72	72	72	72	72	72	72	72	72	72	72	70	66				
9			72	72	72	72	72	72	72	72	72	72	72	70	66	63				
10			72	72	72	72	72	72	72	72	72	72	71	66	63	59				
11			72	72	72	72	72	72	72	72	72	72	68	63	60	57				
12			72	72	72	72	72	72	72	72	72	69	65	61	57	54				
13			72	72	72	72	72	72	72	71	71	67	62	58	55	52				
14			72	72	72	72	72	72	70	68	68	64	60	56	53	50				
15			72	72	72	72	72	70	68	66	66	62	58	54	51	48				
16			72	72	72	72	72	68	65	64	64	60	56	52	50	47				
17			72	72	72	72	70	66	63	62	62	58	54	51	48	46				
18			72	72	72	72	68	64	62	60	60	57	53	49	47	44				
19			72	72	72	70	66	62	60	58	58	55	51	48	46	43				
20			72	72	72	68	65	61	58	57	57	54	50	47	44	42				
S = Surface of the lifted load in m²																				

© .POTAIN. 2002.
Any reproduction for commercial pur-

2. 2. 2. 6. 55 m jib (1C)

Radii			19,3	20	22	25	27	30	32	34,6	37,4	40	45	50	55					
Load curve (in t)			25	24	21,5	18,5	16,9	14,9	13,8	12,5	12,5	11,6	10,1	8,9	7,9					
S (in m²)	Permissible maximum wind speed in service (in km/h)																			
1			72	72	72	72	72	72	72	72	72	72	72	72	72					
2			72	72	72	72	72	72	72	72	72	72	72	72	72					
3			72	72	72	72	72	72	72	72	72	72	72	72	72					
4			72	72	72	72	72	72	72	72	72	72	72	72	72					
5			72	72	72	72	72	72	72	72	72	72	72	72	72					
6			72	72	72	72	72	72	72	72	72	72	72	72	72					
7			72	72	72	72	72	72	72	72	72	72	72	72	72					
8			72	72	72	72	72	72	72	72	72	72	72	72	72					
9			72	72	72	72	72	72	72	72	72	72	72	72	67					
10			72	72	72	72	72	72	72	72	72	72	72	68	64					
11			72	72	72	72	72	72	72	72	72	72	69	65	61					
12			72	72	72	72	72	72	72	72	72	71	66	62	58					
13			72	72	72	72	72	72	72	71	71	68	63	60	56					
14			72	72	72	72	72	72	71	68	68	66	61	57	54					
15			72	72	72	72	72	72	69	66	66	63	59	55	52					
16			72	72	72	72	72	69	67	64	64	61	57	54	51					
17			72	72	72	72	72	67	65	62	62	59	55	52	49					
18			72	72	72	72	70	66	63	60	60	58	54	51	48					
19			72	72	72	71	68	64	61	58	58	56	52	49	46					
20			72	72	72	69	66	62	60	57	57	55	51	48	45					

S = Surface of the lifted load in m²

© POTAIN. 2002.
Any reproduction for commercial pur-

2. 2. 2. 7. 50 m jib (1C)

Radii			19,6	20	22	27	27	30	32	35,1	37,9	40	45	50						
Load curve (in t)			25	24,4	21,8	18,8	17,2	15,1	14	12,5	12,5	11,7	10,2	9,1						
S (in m²)	Permissible maximum wind speed in service (in km/h)																			
1			72	72	72	72	72	72	72	72	72	72	72	72						
2			72	72	72	72	72	72	72	72	72	72	72	72						
3			72	72	72	72	72	72	72	72	72	72	72	72						
4			72	72	72	72	72	72	72	72	72	72	72	72						
5			72	72	72	72	72	72	72	72	72	72	72	72						
6			72	72	72	72	72	72	72	72	72	72	72	72						
7			72	72	72	72	72	72	72	72	72	72	72	72						
8			72	72	72	72	72	72	72	72	72	72	72	72						
9			72	72	72	72	72	72	72	72	72	72	72	72						
10			72	72	72	72	72	72	72	72	72	72	72	69						
11			72	72	72	72	72	72	72	72	72	72	69	65						
12			72	72	72	72	72	72	72	72	72	71	66	63						
13			72	72	72	72	72	72	72	71	71	68	64	60						
14			72	72	72	72	72	72	72	68	68	66	61	58						
15			72	72	72	72	72	72	70	66	66	64	59	56						
16			72	72	72	72	72	70	67	64	64	62	57	54						
17			72	72	72	72	72	68	65	62	62	60	56	53						
18			72	72	72	72	70	66	63	60	60	58	54	51						
19			72	72	72	72	69	64	62	58	58	57	53	50						
20			72	72	72	70	67	63	60	57	57	55	51	49						
S = Surface of the lifted load in m²																				

© .POTAIN. 2002.
Any reproduction for commercial pur-

2. 2. 2. 8. 45 m jib (1C)

Radii			19,7	20	22	25	27	30	32	35,4	38,2	40	45							
Load curve (in t)			25	24,6	22,1	19	17,3	15,3	14,1	12,5	12,5	11,9	10,4							
S (in m²)	Permissible maximum wind speed in service (in km/h)																			
1			72	72	72	72	72	72	72	72	72	72	72							
2			72	72	72	72	72	72	72	72	72	72	72							
3			72	72	72	72	72	72	72	72	72	72	72							
4			72	72	72	72	72	72	72	72	72	72	72							
5			72	72	72	72	72	72	72	72	72	72	72							
6			72	72	72	72	72	72	72	72	72	72	72							
7			72	72	72	72	72	72	72	72	72	72	72							
8			72	72	72	72	72	72	72	72	72	72	72							
9			72	72	72	72	72	72	72	72	72	72	72							
10			72	72	72	72	72	72	72	72	72	72	72							
11			72	72	72	72	72	72	72	72	72	72	70							
12			72	72	72	72	72	72	72	72	72	72	67							
13			72	72	72	72	72	72	72	71	71	69	64							
14			72	72	72	72	72	72	72	68	68	66	62							
15			72	72	72	72	72	72	70	66	66	64	60							
16			72	72	72	72	72	70	68	64	64	62	58							
17			72	72	72	72	72	68	66	62	62	60	56							
18			72	72	72	72	71	66	64	60	60	59	55							
19			72	72	72	72	69	65	62	58	58	57	53							
20			72	72	72	70	67	63	60	57	57	56	52							
S = Surface of the lifted load in m²																				

© POTAIN. 2002.
Any reproduction for commercial pur-

2. 2. 2. 9. 40 m jib (1C)

Radii			19,9	20	22	25	27	30	32	35,6	38,4	40								
Load curve (in t)			25	24,8	22,2	19,1	17,5	15,4	14,3	12,5	12,5	11,9								
S (in m²)	Permissible maximum wind speed in service (in km/h)																			
1			72	72	72	72	72	72	72	72	72	72								
2			72	72	72	72	72	72	72	72	72	72								
3			72	72	72	72	72	72	72	72	72	72								
4			72	72	72	72	72	72	72	72	72	72								
5			72	72	72	72	72	72	72	72	72	72								
6			72	72	72	72	72	72	72	72	72	72								
7			72	72	72	72	72	72	72	72	72	72								
8			72	72	72	72	72	72	72	72	72	72								
9			72	72	72	72	72	72	72	72	72	72								
10			72	72	72	72	72	72	72	72	72	72								
11			72	72	72	72	72	72	72	72	72	72								
12			72	72	72	72	72	72	72	72	72	72								
13			72	72	72	72	72	72	72	71	71	69								
14			72	72	72	72	72	72	72	68	68	66								
15			72	72	72	72	72	72	70	66	66	64								
16			72	72	72	72	72	71	68	64	64	62								
17			72	72	72	72	72	69	66	62	62	60								
18			72	72	72	72	71	67	64	60	60	59								
19			72	72	72	72	69	65	62	58	58	57								
20			72	72	72	70	67	63	61	57	57	56								
S = Surface of the lifted load in m²																				

© .POTAIN. 2002.
Any reproduction for commercial pur-

2. 2. 2. 10. 35 m jib (1C)

Radii				20	22	25	27	30	32	35										
Load curve (in t)				25	22,4	19,3	17,6	15,5	14,3	12,8										
S (in m²)	Permissible maximum wind speed in service (in km/h)																			
1				72	72	72	72	72	72	72										
2				72	72	72	72	72	72	72										
3				72	72	72	72	72	72	72										
4				72	72	72	72	72	72	72										
5				72	72	72	72	72	72	72										
6				72	72	72	72	72	72	72										
7				72	72	72	72	72	72	72										
8				72	72	72	72	72	72	72										
9				72	72	72	72	72	72	72										
10				72	72	72	72	72	72	72										
11				72	72	72	72	72	72	72										
12				72	72	72	72	72	72	72										
13				72	72	72	72	72	72	71										
14				72	72	72	72	72	72	69										
15				72	72	72	72	72	70	67										
16				72	72	72	72	71	68	64										
17				72	72	72	72	69	66	62										
18				72	72	72	71	67	64	61										
19				72	72	72	69	65	62	59										
20				72	72	71	68	63	61	58										

S = Surface of the lifted load in m²

© POTAIN. 2002.
Any reproduction for commercial pur-

2. 2. 3. Permissible maximum wind speed for a load surface bigger than 1m²/t (2C in 2C version)

2. 2. 3. 1. 80 m jib (2C)

Radii	14,3	15	17	20	22	25	25,2	27,2	30	32	35	40	45	50	55	60	65	70	75	80
Load curve (in t)	25	23,6	20,3	16,7	14,8	12,6	12,5	11,37	9,97	9,17	8,17	6,77	5,67	4,77	4,07	3,47	3,07	2,57	2,27	1,87
S (in m²)	Permissible maximum wind speed in service (in km/h)																			
1	72	72	72	72	72	72	72	72	72	72	72	72	72	72	72	72	72	72	72	72
2	72	72	72	72	72	72	72	72	72	72	72	72	72	72	72	72	72	72	72	70
3	72	72	72	72	72	72	72	72	72	72	72	72	72	72	72	72	72	67	63	57
4	72	72	72	72	72	72	72	72	72	72	72	72	72	72	72	67	63	58	54	49
5	72	72	72	72	72	72	72	72	72	72	72	72	72	70	65	60	56	52	49	44
6	72	72	72	72	72	72	72	72	72	72	72	72	70	64	59	55	52	47	44	40
7	72	72	72	72	72	72	72	72	72	72	72	71	65	59	55	51	48	44	41	37
8	72	72	72	72	72	72	72	72	72	72	72	66	61	56	51	47	45	41	38	35
9	72	72	72	72	72	72	72	72	72	72	69	62	57	52	48	45	42	38	36	33
10	72	72	72	72	72	72	72	72	72	69	65	59	54	50	46	42	40	37	34	31
11	72	72	72	72	72	72	72	72	69	66	62	56	52	47	44	40	38	35	33	30
12	72	72	72	72	72	72	72	70	66	63	59	54	49	45	42	39	36	33	31	28
13	72	72	72	72	72	71	71	67	63	60	57	52	48	44	40	37	35	32	30	27
14	72	72	72	72	72	68	68	65	61	58	55	50	46	42	39	36	34	31	29	26
15	72	72	72	72	72	66	66	63	59	56	53	48	44	41	38	35	33	30	28	25
16	72	72	72	72	69	64	64	61	57	55	51	47	43	39	36	34	32	29	27	25
17	72	72	72	71	67	62	62	59	55	53	50	45	42	38	35	33	31	28	26	24
18	72	72	72	69	65	60	60	57	54	51	49	44	40	37	34	32	30	27	26	23
19	72	72	72	68	64	59	58	56	52	50	47	43	39	36	33	31	29	26	25	23
20	72	72	72	66	62	57	57	54	51	49	46	42	38	35	32	30	28	26	24	22

S = Surface of the lifted load in m²

© .POTAIN. 2002.
Any reproduction for commercial pur-

2. 2. 3. 2. 75 m jib (2C)

Radii		15,6	17	20	22	25	27	27,7	29,9	32	35	40	45	50	55	60	65	70	75	
Load curve (in t)		25	22,6	18,6	16,6	14,2	12,9	12,5	11,37	10,47	9,27	7,77	6,57	5,67	4,87	4,17	3,67	3,17	2,87	
S (in m^2)	Permissible maximum wind speed in service (in km/h)																			
1		72	72	72	72	72	72	72	72	72	72	72	72	72	72	72	72	72	72	
2		72	72	72	72	72	72	72	72	72	72	72	72	72	72	72	72	72	72	
3		72	72	72	72	72	72	72	72	72	72	72	72	72	72	72	72	72	70	
4		72	72	72	72	72	72	72	72	72	72	72	72	72	72	72	69	64	61	
5		72	72	72	72	72	72	72	72	72	72	72	72	72	71	66	62	57	55	
6		72	72	72	72	72	72	72	72	72	72	72	72	70	65	60	56	52	50	
7		72	72	72	72	72	72	72	72	72	72	72	70	65	60	56	52	48	46	
8		72	72	72	72	72	72	72	72	72	72	71	65	61	56	52	49	45	43	
9		72	72	72	72	72	72	72	72	72	72	67	62	57	53	49	46	43	41	
10		72	72	72	72	72	72	72	72	72	69	63	58	54	50	46	44	41	39	
11		72	72	72	72	72	72	72	72	70	66	61	56	52	48	44	42	39	37	
12		72	72	72	72	72	72	72	70	67	63	58	53	49	46	42	40	37	35	
13		72	72	72	72	72	72	71	67	65	61	56	51	48	44	41	38	36	34	
14		72	72	72	72	72	69	68	65	62	59	54	49	46	42	39	37	34	33	
15		72	72	72	72	70	67	66	63	60	57	52	48	44	41	38	36	33	31	
16		72	72	72	72	68	65	64	61	58	55	50	46	43	40	37	34	32	30	
17		72	72	72	71	66	63	62	59	57	53	49	45	42	39	36	33	31	30	
18		72	72	72	69	64	61	60	57	55	52	47	43	40	37	35	33	30	29	
19		72	72	71	67	62	59	58	56	53	50	46	42	39	36	34	32	29	28	
20		72	72	69	66	61	58	57	54	52	49	45	41	38	36	33	31	29	27	

S = Surface of the lifted load in m^2

© POTAIN. 2002.
Any reproduction for commercial pur-

2. 2. 3. 3. 70 m jib (2C)

Radii			18	20	22	25	27	30	32,3	34,8	35	40	45	50	55	60	65	70		
Load curve (in t)			25	22,2	19,8	17,1	15,6	13,7	12,5	11,37	11,27	9,57	8,17	7,07	6,17	5,47	4,77	4,27		
S (in m^2)	Permissible maximum wind speed in service (in km/h)																			
1			72	72	72	72	72	72	72	72	72	72	72	72	72	72	72	72		
2			72	72	72	72	72	72	72	72	72	72	72	72	72	72	72	72		
3			72	72	72	72	72	72	72	72	72	72	72	72	72	72	72	72		
4			72	72	72	72	72	72	72	72	72	72	72	72	72	72	72	72		
5			72	72	72	72	72	72	72	72	72	72	72	72	72	72	70	67		
6			72	72	72	72	72	72	72	72	72	72	72	72	72	69	64	61		
7			72	72	72	72	72	72	72	72	72	72	72	72	68	64	59	56		
8			72	72	72	72	72	72	72	72	72	72	72	68	63	60	56	53		
9			72	72	72	72	72	72	72	72	72	72	69	64	60	56	52	50		
10			72	72	72	72	72	72	72	72	72	70	65	61	57	53	50	47		
11			72	72	72	72	72	72	72	72	72	67	62	58	54	51	47	45		
12			72	72	72	72	72	72	72	70	70	64	59	55	52	49	45	43		
13			72	72	72	72	72	72	71	67	67	62	57	53	50	47	44	41		
14			72	72	72	72	72	71	68	65	65	60	55	51	48	45	42	40		
15			72	72	72	72	72	69	66	63	62	58	53	49	46	43	41	38		
16			72	72	72	72	71	67	64	61	60	56	51	48	45	42	39	37		
17			72	72	72	72	69	65	62	59	59	54	50	46	43	41	38	36		
18			72	72	72	70	67	63	60	57	57	52	49	45	42	40	37	35		
19			72	72	72	68	65	61	58	56	55	51	47	44	41	39	36	34		
20			72	72	72	67	64	60	57	54	54	50	46	43	40	38	35	33		

S = Surface of the lifted load in m^2

© .POTAIN. 2002.
Any reproduction for commercial pur-

2. 2. 3. 4. 65 m jib (2C)

Radii			18,1	20	22	25	27	30	32,4	34,9	35	40	45	50	55	60	65			
Load curve (in t)			25	22,2	19,9	17,1	15,6	13,7	12,5	11,37	11,37	9,57	8,17	7,07	6,17	5,47	4,77			
S (in m²)	Permissible maximum wind speed in service (in km/h)																			
1			72	72	72	72	72	72	72	72	72	72	72	72	72	72	72			
2			72	72	72	72	72	72	72	72	72	72	72	72	72	72	72			
3			72	72	72	72	72	72	72	72	72	72	72	72	72	72	72			
4			72	72	72	72	72	72	72	72	72	72	72	72	72	72	72			
5			72	72	72	72	72	72	72	72	72	72	72	72	72	72	70			
6			72	72	72	72	72	72	72	72	72	72	72	72	72	69	64			
7			72	72	72	72	72	72	72	72	72	72	72	72	68	64	59			
8			72	72	72	72	72	72	72	72	72	72	72	68	63	60	56			
9			72	72	72	72	72	72	72	72	72	72	69	64	60	56	52			
10			72	72	72	72	72	72	72	72	72	70	65	61	57	53	50			
11			72	72	72	72	72	72	72	72	72	67	62	58	54	51	47			
12			72	72	72	72	72	72	72	70	70	64	59	55	52	49	45			
13			72	72	72	72	72	72	71	67	67	62	57	53	50	47	44			
14			72	72	72	72	72	71	68	65	65	60	55	51	48	45	42			
15			72	72	72	72	72	69	66	63	63	58	53	49	46	43	41			
16			72	72	72	72	71	67	64	61	61	56	51	48	45	42	39			
17			72	72	72	72	69	65	62	59	59	54	50	46	43	41	38			
18			72	72	72	70	67	63	60	57	57	52	49	45	42	40	37			
19			72	72	72	68	65	61	58	56	56	51	47	44	41	39	36			
20			72	72	72	67	64	60	57	54	54	50	46	43	40	38	35			
S = Surface of the lifted load in m²																				

© POTAIN. 2002.
Any reproduction for commercial pur-

2. 2. 3. 5. 60 m jib (2C)

Radii			18,7	20	22	25	27	30	32	33,4	36,1	40	45	50	55	60				
Load curve (in t)			25	23,1	20,7	17,8	16,2	14,3	13,2	12,5	11,37	9,97	8,57	7,37	6,47	5,67				
S (in m^2)	Permissible maximum wind speed in service (in km/h)																			
1			72	72	72	72	72	72	72	72	72	72	72	72	72	72				
2			72	72	72	72	72	72	72	72	72	72	72	72	72	72				
3			72	72	72	72	72	72	72	72	72	72	72	72	72	72				
4			72	72	72	72	72	72	72	72	72	72	72	72	72	72				
5			72	72	72	72	72	72	72	72	72	72	72	72	72	72				
6			72	72	72	72	72	72	72	72	72	72	72	72	72	70				
7			72	72	72	72	72	72	72	72	72	72	72	72	69	65				
8			72	72	72	72	72	72	72	72	72	72	72	69	65	61				
9			72	72	72	72	72	72	72	72	72	72	70	65	61	57				
10			72	72	72	72	72	72	72	72	72	72	67	62	58	54				
11			72	72	72	72	72	72	72	72	72	69	64	59	55	52				
12			72	72	72	72	72	72	72	72	70	66	61	56	53	49				
13			72	72	72	72	72	72	72	71	67	63	58	54	51	48				
14			72	72	72	72	72	72	70	68	65	61	56	52	49	46				
15			72	72	72	72	72	70	68	66	63	59	54	50	47	44				
16			72	72	72	72	72	68	65	64	61	57	53	49	46	43				
17			72	72	72	72	70	66	63	62	59	55	51	47	44	42				
18			72	72	72	72	68	64	62	60	57	54	50	46	43	40				
19			72	72	72	70	66	62	60	58	56	52	48	45	42	39				
20			72	72	72	68	65	61	58	57	54	51	47	44	41	38				
S = Surface of the lifted load in m^2																				

© .POTAIN. 2002.
Any reproduction for commercial pur-

2. 2. 3. 6. 55 m jib (2C)

Radii			19,3	20	22	25	27	30	32	34,6	37,4	40	45	50	55					
Load curve (in t)			25	24	21,5	18,5	16,9	14,9	13,8	12,5	11,37	10,47	8,97	7,77	6,77					
S (in m^2)	Permissible maximum wind speed in service (in km/h)																			
1			72	72	72	72	72	72	72	72	72	72	72	72	72					
2			72	72	72	72	72	72	72	72	72	72	72	72	72					
3			72	72	72	72	72	72	72	72	72	72	72	72	72					
4			72	72	72	72	72	72	72	72	72	72	72	72	72					
5			72	72	72	72	72	72	72	72	72	72	72	72	72					
6			72	72	72	72	72	72	72	72	72	72	72	72	72					
7			72	72	72	72	72	72	72	72	72	72	72	72	71					
8			72	72	72	72	72	72	72	72	72	72	72	71	66					
9			72	72	72	72	72	72	72	72	72	72	72	67	62					
10			72	72	72	72	72	72	72	72	72	72	68	63	59					
11			72	72	72	72	72	72	72	72	72	70	65	61	56					
12			72	72	72	72	72	72	72	72	70	67	62	58	54					
13			72	72	72	72	72	72	72	71	67	65	60	56	52					
14			72	72	72	72	72	72	71	68	65	62	58	54	50					
15			72	72	72	72	72	72	69	66	63	60	56	52	48					
16			72	72	72	72	72	69	67	64	61	58	54	50	47					
17			72	72	72	72	72	67	65	62	59	57	52	49	45					
18			72	72	72	72	70	66	63	60	57	55	51	47	44					
19			72	72	72	71	68	64	61	58	56	53	49	46	43					
20			72	72	72	69	66	62	60	57	54	52	48	45	42					

S = Surface of the lifted load in m^2

© POTAIN. 2002.
Any reproduction for commercial pur-

2. 2. 3. 7. 50 m jib (2C)

Radii			19,6	20	22	25	27	30	32	35,1	37,9	40	45	50						
Load curve (in t)			25	24,4	21,8	18,8	17,2	15,1	14	12,5	11,37	10,57	9,07	7,97						
S (in m²)	Permissible maximum wind speed in service (in km/h)																			
1			72	72	72	72	72	72	72	72	72	72	72	72						
2			72	72	72	72	72	72	72	72	72	72	72	72						
3			72	72	72	72	72	72	72	72	72	72	72	72						
4			72	72	72	72	72	72	72	72	72	72	72	72						
5			72	72	72	72	72	72	72	72	72	72	72	72						
6			72	72	72	72	72	72	72	72	72	72	72	72						
7			72	72	72	72	72	72	72	72	72	72	72	72						
8			72	72	72	72	72	72	72	72	72	72	72	72						
9			72	72	72	72	72	72	72	72	72	72	72	68						
10			72	72	72	72	72	72	72	72	72	72	69	64						
11			72	72	72	72	72	72	72	72	72	71	65	61						
12			72	72	72	72	72	72	72	72	70	68	63	59						
13			72	72	72	72	72	72	72	71	67	65	60	56						
14			72	72	72	72	72	72	72	68	65	63	58	54						
15			72	72	72	72	72	72	70	66	63	60	56	52						
16			72	72	72	72	72	70	67	64	61	59	54	51						
17			72	72	72	72	72	68	65	62	59	57	53	49						
18			72	72	72	72	70	66	63	60	57	55	51	48						
19			72	72	72	72	69	64	62	58	56	54	50	47						
20			72	72	72	70	67	63	60	57	54	52	48	45						
S = Surface of the lifted load in m²																				

© .POTAIN. 2002.
Any reproduction for commercial pur-

2. 2. 3. 8. 45 m jib (2C)

Radii			19,7	20	22	25	27	30	32	35,4	38,2	40	45							
Load curve (in t)			25	24,6	22,1	19	17,3	15,3	14,1	12,5	11,37	10,77	9,27							
S (in m²)	Permissible maximum wind speed in service (in km/h)																			
1			72	72	72	72	72	72	72	72	72	72	72							
2			72	72	72	72	72	72	72	72	72	72	72							
3			72	72	72	72	72	72	72	72	72	72	72							
4			72	72	72	72	72	72	72	72	72	72	72							
5			72	72	72	72	72	72	72	72	72	72	72							
6			72	72	72	72	72	72	72	72	72	72	72							
7			72	72	72	72	72	72	72	72	72	72	72							
8			72	72	72	72	72	72	72	72	72	72	72							
9			72	72	72	72	72	72	72	72	72	72	72							
10			72	72	72	72	72	72	72	72	72	72	69							
11			72	72	72	72	72	72	72	72	72	71	66							
12			72	72	72	72	72	72	72	72	70	68	63							
13			72	72	72	72	72	72	72	71	67	66	61							
14			72	72	72	72	72	72	72	68	65	63	59							
15			72	72	72	72	72	72	70	66	63	61	57							
16			72	72	72	72	72	70	68	64	61	59	55							
17			72	72	72	72	72	68	66	62	59	57	53							
18			72	72	72	72	71	66	64	60	57	56	52							
19			72	72	72	72	69	65	62	58	56	54	50							
20			72	72	72	70	67	63	60	57	54	53	49							
S = Surface of the lifted load in m²																				

© POTAIN. 2002.
Any reproduction for commercial pur-

2. 2. 3. 9. 40 m jib (2C)

Radii			19,9	20	22	25	27	30	32	35,6	38,4	40								
Load curve (in t)			25	24,8	22,2	19,1	17,5	15,4	14,3	12,5	11,37	10,77								
S (in m²)	Permissible maximum wind speed in service (in km/h)																			
1			72	72	72	72	72	72	72	72	72	72								
2			72	72	72	72	72	72	72	72	72	72								
3			72	72	72	72	72	72	72	72	72	72								
4			72	72	72	72	72	72	72	72	72	72								
5			72	72	72	72	72	72	72	72	72	72								
6			72	72	72	72	72	72	72	72	72	72								
7			72	72	72	72	72	72	72	72	72	72								
8			72	72	72	72	72	72	72	72	72	72								
9			72	72	72	72	72	72	72	72	72	72								
10			72	72	72	72	72	72	72	72	72	72								
11			72	72	72	72	72	72	72	72	72	71								
12			72	72	72	72	72	72	72	72	70	68								
13			72	72	72	72	72	72	72	71	67	66								
14			72	72	72	72	72	72	72	68	65	63								
15			72	72	72	72	72	72	70	66	63	61								
16			72	72	72	72	72	71	68	64	61	59								
17			72	72	72	72	72	69	66	62	59	57								
18			72	72	72	72	71	67	64	60	57	56								
19			72	72	72	72	69	65	62	58	56	54								
20			72	72	72	70	67	63	61	57	54	53								

S = Surface of the lifted load in m²

© .POTAIN. 2002.
Any reproduction for commercial pur-

2. 2. 3. 10. 35 m jib (2C)

Radii				20	22	25	27	30	32	35										
Load curve (in t)				25	22,4	19,3	17,6	15,5	14,3	12,8										
S (in m²)	Permissible maximum wind speed in service (in km/h)																			
1				72	72	72	72	72	72	72										
2				72	72	72	72	72	72	72										
3				72	72	72	72	72	72	72										
4				72	72	72	72	72	72	72										
5				72	72	72	72	72	72	72										
6				72	72	72	72	72	72	72										
7				72	72	72	72	72	72	72										
8				72	72	72	72	72	72	72										
9				72	72	72	72	72	72	72										
10				72	72	72	72	72	72	72										
11				72	72	72	72	72	72	72										
12				72	72	72	72	72	72	72										
13				72	72	72	72	72	72	71										
14				72	72	72	72	72	72	69										
15				72	72	72	72	72	70	67										
16				72	72	72	72	71	68	64										
17				72	72	72	72	69	66	62										
18				72	72	72	71	67	64	61										
19				72	72	72	69	65	62	59										
20				72	72	71	68	63	61	58										

S = Surface of the lifted load in m²

© POTAIN. 2002.
Any reproduction for commercial pur-